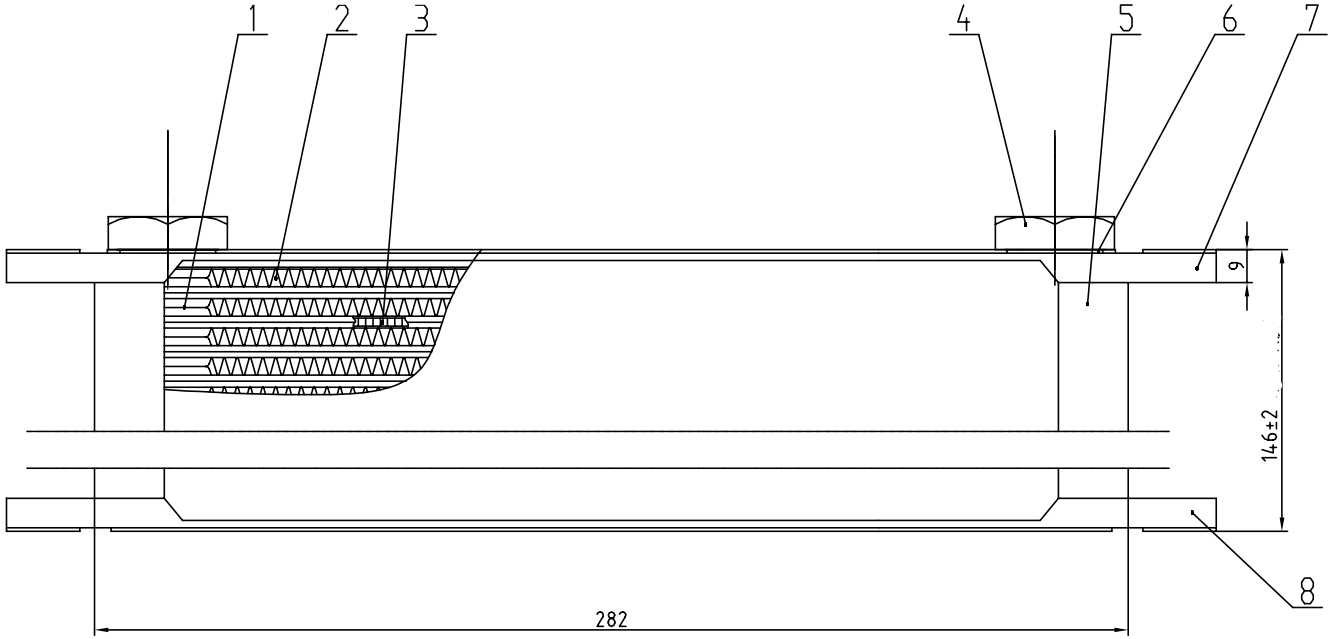
1
2
3
4
5
6
7
8
9
146±2
282

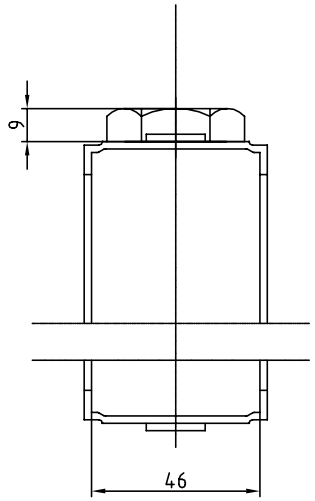
9
46

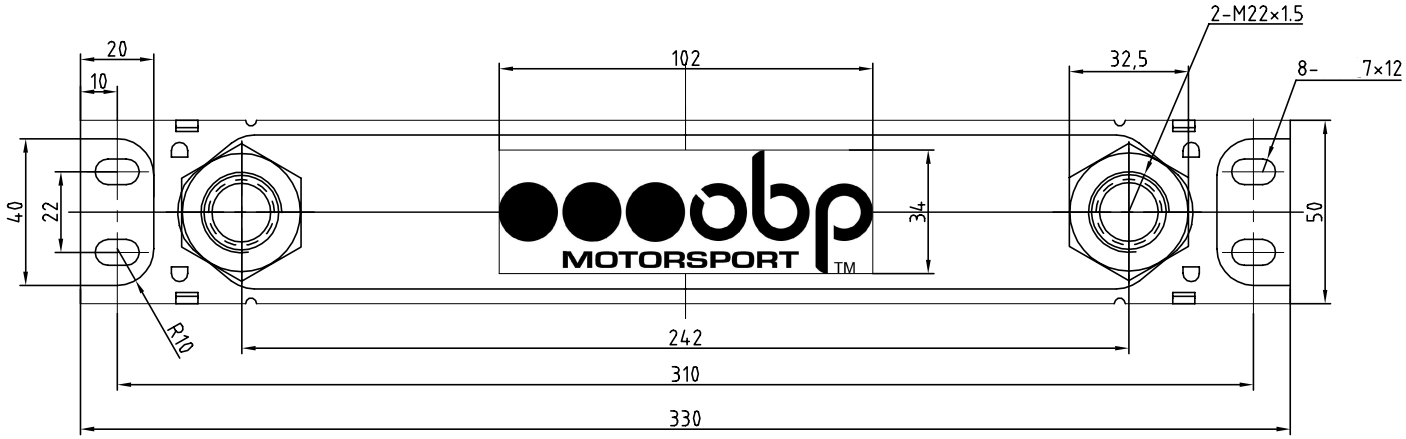
2-M22×1.5
8- 7×12
20
10
102
32,5
40
22
34
50
R10
242
310
330
obp
MOTORSPORT
TM